MARK	DATE	REMARKS
△1		
△2		

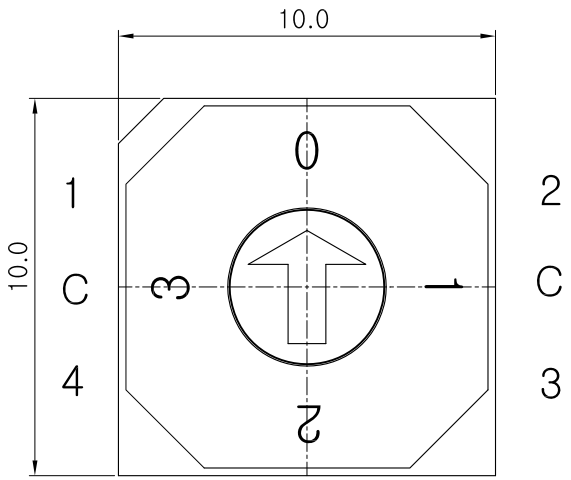

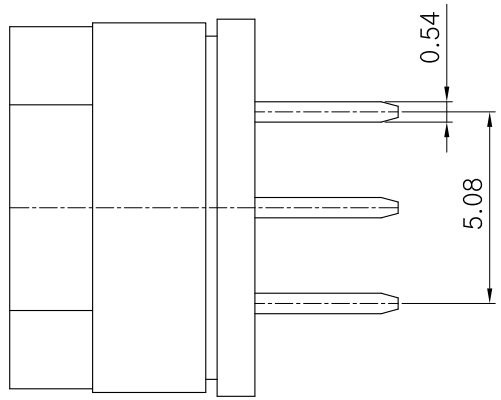

SPECIFICATION

1.MECHANICAL DATA

PERMISS. AMBIENT TEMP. -40°C - +85°C

TORQUE MIN. 0.7NCm

MECH. LIFETIME MIN. 10° STEPS

POSITIONS PER ROTATION

10, 16(NON-SELF-LOCKING)

2. ELECTRICAL DATA

OPERATING VOLTAGE <=42V

CONTACT LOAD. STATIC <= 0.2A

CONTACT LOAD. DYNAMIC <= 0.15A

NORMAL AND TEST VOLTAGE 250V 50Hz/1min

CONTACT RESISTANT < 80mOhm

INSULATION RESISTANCE > 100MOhm

3. SOLDER RECOMMENDATIONS

SOLDER IRON MAX. 2s/340°C

SOLDER BATH MAX. 10s/260°C

4. LIFE Cycle : 10,000 Steps

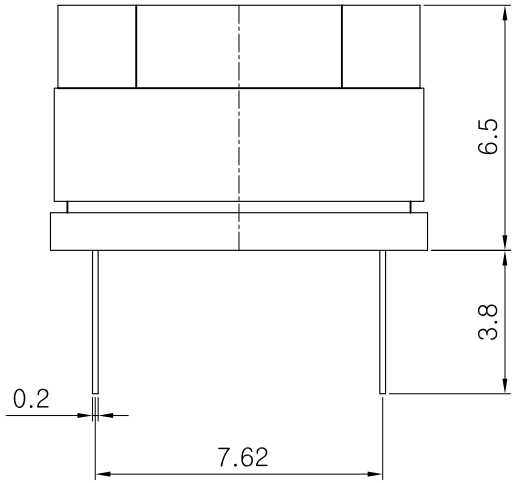

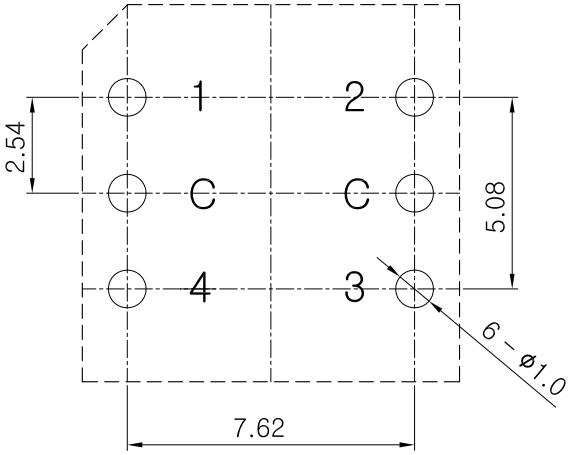

P.C.B DIMENSION

		Dezimal				
		C	1	2	3	4
4 Position	0	●				●
	1	●	●			
	2	●		●		
	3	●			●	

APPD	CHKD	D'SGD	TITLE.	ROTARY DIP SWITCH	
Y.D WANG	J.S KIM	H.S LEE	MODEL NO.	PED-04	REV A
			SM SWITCH CO., LTD.		